Simple and friendly

Kawasaki Robot

EUROPE

B-SERIES

up to 200 kg payload

»Simple and friendly«
INTO THE FUTURE

The B-series combines the Z-series and the R-series with innovative technology and presents itself as a spot-welding robot of the latest generation.

»40 years of experience and state-of-the-art robot technology«

An extremely compact and light-weight design the basis for high speed and rigidity as well as an enormous reach.

»Your goal is our task«

It was Kawasaki's intelligence and flexibility which made them build the most powerful robots in their class. Combined with a high-end control system, they meet the demands of the most varied applications – now and in the future.

THE B-SERIES

1. Maximum Benefit

Minimised net weight and high performance, maximum reduction of vibration, and use of heavy-duty motors makes this robot a champion sprinter. It excels with maximum power over short distances, especially as it is demanded in spot welding.

2. Synergy

Based on existing robot series, the B-Series is the synergy of proven technologies. The sleek R-series design combined with the robustness of the Z-series and the use of other proven Kawasaki solutions makes this robot series particularly effective.

3. Design

This series continues Kawasaki's consistent aim of building space-saving robots. Kawasaki's success is evident at first glance of its BX robots, providing maximum payload capacity with minimum space requirements.

4. Intelligent Solution

The „hollow wrist" allows the internal routing of cable assemblies. This significantly increases durability, eliminating undesirable interference contours.

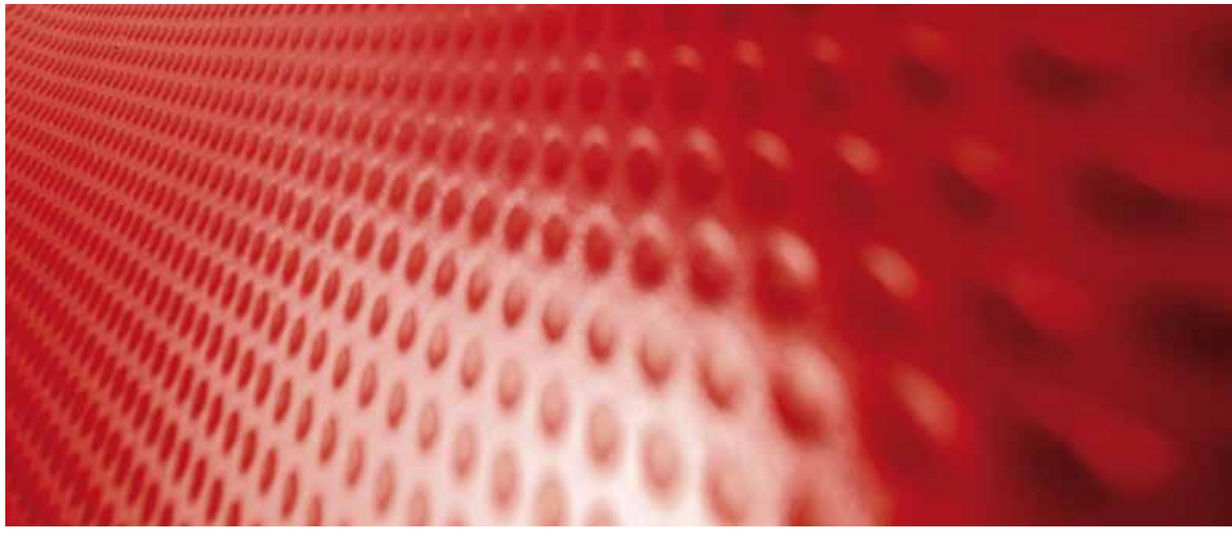

MODEL		BX100N	BX200L
Degrees of Freedom		6 Axis	
Maximum Reach*1		2200 mm	2597 mm
Maximum Payload		100 kg	200 kg
Maximum Stroke	Axis 1	±160 °	±160 °
	Axis 2	+120 ° ~ -65 °	+76° ~ -60 °
	Axis 3	+90 ° ~ -77 °	+90 ° ~ -75 °
	Axis 4	+210° ~ -210°	+210° ~ -210°
	Axis 5	+125° ~ -125°	+125° ~ -125°
	Axis 6	+210° ~ -210°	+210° ~ -210°
Maximum Speed	Axis 1	135 °/s	105 °/s
	Axis 2	110 °/s	90 °/s
	Axis 3	140 °/s	100 °/s
	Axis 4	200 °/s	120 °/s
	Axis 5	200 °/s	120 °/s
	Axis 6	300 °/s	200 °/s
Moment	Axis 4	588,4 N·m	1334 N·m
	Axis 5	588,4 N·m	1334 N·m
	Axis 6	294,2 N·m	588 N·m
Moment of Inertia	Axis 4	60 kg·m²	199,8 kg·m²
	Axis 5	60 kg·m²	199,8 kg·m²
	Axis 6	30 kg·m²	154,9 kg·m²
Repeatability (Measure Point: Middle of Flange Axis 6)		± 0,2 mm	
Weight		740 kg	930 kg
Max. linear Speed (Measure Point: Middle of Flange Axis 6)		5000 mm/s	
Controller		E42	
Color		Munsell 10GY9/1	
Installation		Floor or Ceiling	
Ambient Conditions	Temperature	0 ~ 45 °C	
	Humidity	35 ~ 85 % (no Dew, nor Frost allowed)	
	Others	Installation Ambience must be free of: • Inflammable or corrosive Liquid or Gas • Electric Noise Interferences	
Protection Class		Wrist Unit: IP67 / Basic Axes: IP65	

*1 Distance between Centre of Axis 1 and Axis 5..

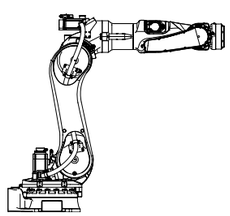

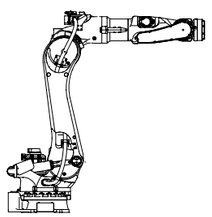

BX100N

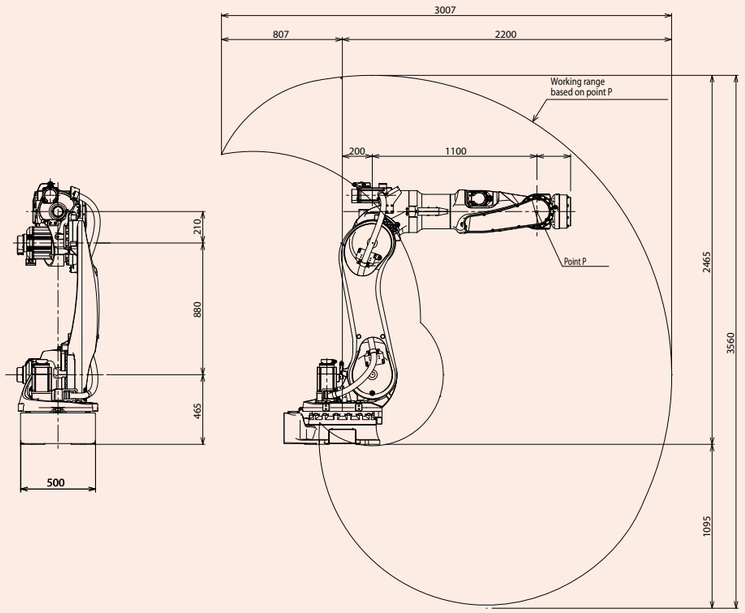

BX200L

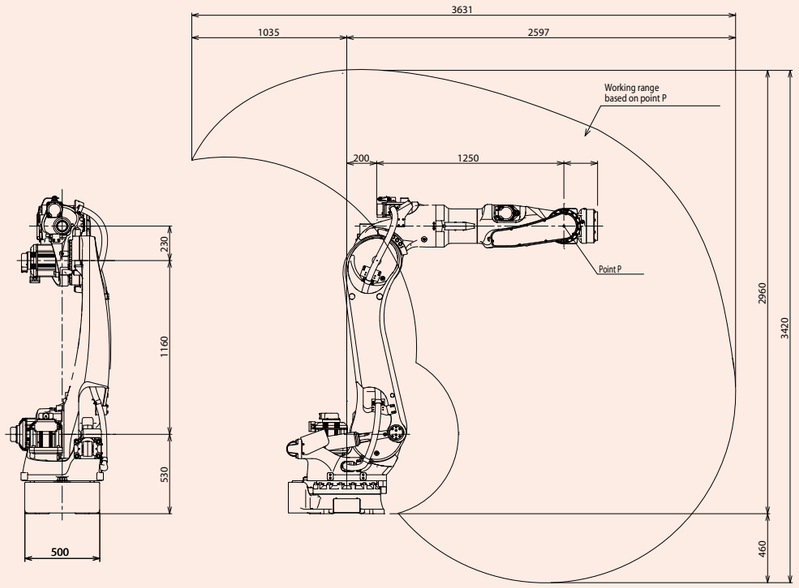

CONTROLLER

1. Control

The E-Controller as consistent further development of the existing control concept has been developed in close cooperation with Kawasaki‘s customers. In this way, a state-of-the-art high-end product has been created - offering the familiar ease of operation and exceptionally high power.

2. Compact and upgradeable

A maximum of 10 external axes may be integrated, up to three of which in the controller housing (E4x). All established bus systems (Interbus, Profibus, ProfiNet…) are supported. The integrated Soft PLC may be edited via Teach Pendant or even more comfortably at the PC. Custom-tailored user interfaces may be programmed and used for the simplified control of the robot and also peripheral devices.

3. User-friendly system

Motor power ON and program start may be activated directly via the manual control unit. The parallel display of two information screens (e.g. position and signal data) facilitates the process control.

4. Functions

Integrated software functions support the most various applications. Through individual combination and programming, highly complex systems may be designed and realized. (e.g. Soft Absorber, Collision Detection, Conveyor Tracking and many more).

5. System

Ultra-fast execution of programs, loading and storing processes as well as a precise continuous-path control and much more thanks to the up-to-date processor design and powerful components. 8 MB RAM (80,000 steps) and USB interface as standard.

6. Maintenance

»Simple and friendly« Due to the optimized modular configuration of the Kawasaki control, maintenance work is exceptionally user-friendly. Furthermore, integrated service and diagnosis tools guarantee increased safety in operation. Remote diagnosis via Ethernet is also included in the standard package.

MODEL			E42
Number of Controlled Axes			*6 (optional 16)*
Servo Motors			*Brushless AC Servomotors*
Position Detectors			*Absolute Encoder*
Servo System			*Full digital servo system*
Programming			*Block or AS-Language*
Coordinate Systems			*Joint, Base, Tool, external Tool*
Motion Control			*Joint-, Linear- and Circular interpolated*
Signals	External		*Motor power, Signal HOLD, etc.*
	Input		*32 (optional 128)*
	Output		*32 (optional 128)*
	Analogue Input (optional)		*8/16*
	Analogue Output (optional)		*4/8/12/16*
Memory			*8 MB (ca. 80.000 steps)*
External Memory			*2 x USB*
Data Interfaces	PC, Network, etc.		*2 x RS-232C, 2 x Ethernet*
	Fieldbus (optional)		*DeviceNet®, PROFIBUS®, PROFINET®, INTERBUS-S®, Ethernet/IP®, CC-Link®, CANopen®, Modbus TCP®, Control Net®*
Teach Pendant			*6.4“ LCD with Touch Panel, Emergency Stop SW, Teach-Lock, Deadman SW, Motor power, Program start, Hold/Run*
Operation Panel			*Emergency Stop SW, Control Power, TEACH/REPEAT*
Cable Length (Controller – Arm, Controller – Teach Pendant)			*5 m (Arm: optional up to 15 m), (TP: optional up to 15 m)*
Dimensions (WxDxH mm)			*550x550x1200*
Weight (kg)			*180 kg*
Power Requirements			*AC 380-415V ± 10%, 50/60Hz, 3 Phases, 9,9kVA*
Ground			*<100Ω, Max. Leakage Current 10mA*
Safety Category			*3, Performance Level d (EN ISO13849-1:2008)*
Ambience Temperature / Humidity			*0-45°C / 35-85% (no Dew or Frost allowed)*
Color			*Munsell 10GY9/1*

Note: Not all Options can be combined.

E40/E42

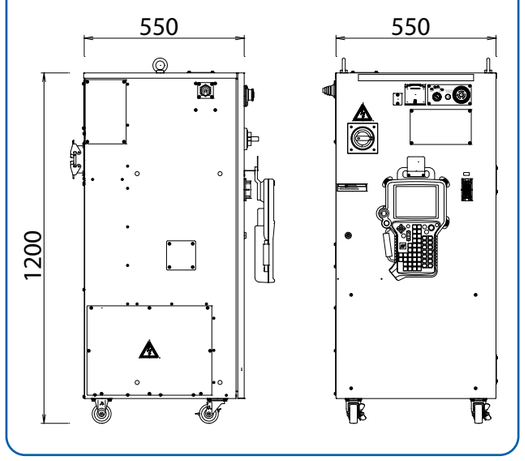

Simple and friendly

Kawasaki Robot

Cautions to be taken to ensure safety

For those persons involved with the operation / service of your system, including Kawasaki Robot, they must strictly observe all safety regulations at all times. They should carefully read the Manuals and other related safety documents.

Products described in this catalogue are general industrial robots. Therefore, if a customer wishes to use the Robot for special purposes, which might endanger operators or if the Robot has any problems, please contact us. We will be pleased to help you.

BE CAREFUL: All photos illustrated in this catalogue are frequently taken after removing safety fences and other safety devices stipulated in the safety regulations from the Robot operation system.

Inquiries

Kawasaki Robotics GmbH Deutschland
Headquarter Neuss
Sperberweg 29 · 41468 Neuss
E-Mail: info@kawasakirobot.de · www.kawasakirobot.de

Tel. +49-(0)2131 342 60
Fax +49-(0)2131 34 26 22

Kawasaki Robotics (UK) Ltd.
Unit 4 Easter Court, Europa Boulevard, Westbrook
Warrington WA5 7ZB · United Kingdom
E-Mail: info@kawasakirobot.uk.com · www.kawasakirobot.uk.com

Tel. +44-(0)1925 71 30 00
Fax +44-(0)1925 71 30 01

Agent

ISO9001 REGISTERED FIRM
DNV Certification B.V., THE NETHERLANDS

ISO14001 REGISTERED FIRM
DNV Certification B.V., THE NETHERLANDS

Printed in Germany March 2012 Catalogue No. GE123

Materials and specification are subject to change without notice.